Specifications

Filter Tap Matte White

AFT-MW
Aspen Filter Tap Matte White

Aspen filter tap with swivel spout
This product is the tap only and does not include the filter set.
Refer to the "AFTKIT" code products which include the tap and filter set
210mm aerator height x 145mm reach
Mains pressure only
Recommended working pressure 200 – 500kPa (balanced)

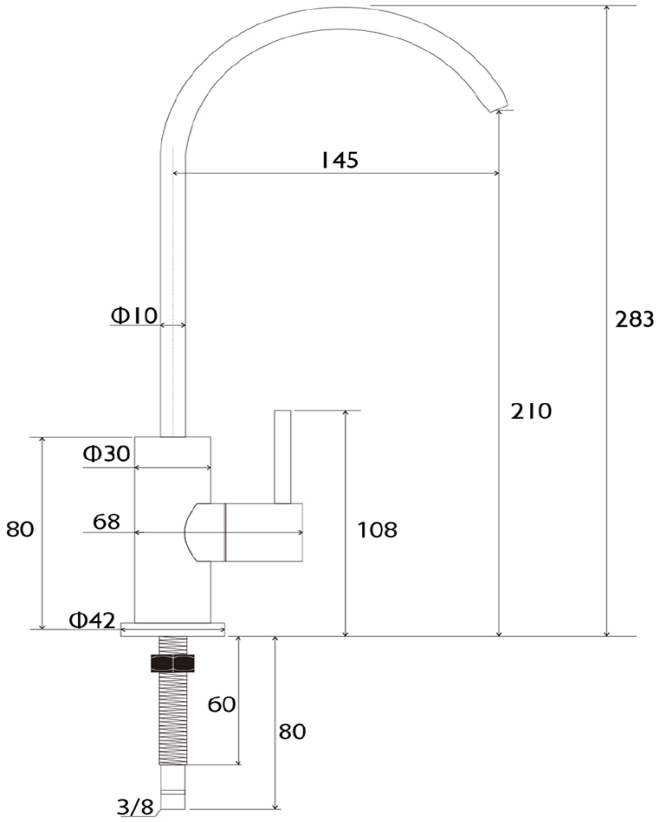

CARE AND USE

Filter Taps

Tapware surfaces need to be cleaned regularly with a soft damp micro-fibre cloth using water mixed with a mild liquid detergent only, then wiped dry with a soft micro-fibre cloth to avoid water spots.
Do not use cleaning agents containing corrosive acid or scouring agents, as well as cream cleaners (they are abrasive), as they may damage the surface which can void your warranty.

LIMITED PRODUCT WARRANTIES

To be read in conjunction with and subject to all terms and conditions contained in the Waterware 'Producer Statement' available on-line (http://www.waterware.co.nz/media-downloads) From date of purchase, Waterware Services warrants products from the following categories to be free from manufacturing defect subject to exclusions (if applicable):

Category	Domestic Installations	Commercial Installations	Exclusions	Wels
Aspen Filter Taps	2 years parts only	2 years parts only	None	Not rated

waterware.co.nz
info@waterware.co.nz
0800 WATERWARE

WATERWARE